REVISIONS			
REV.	DESCRIPTION	DATE	APPROVED
–	RELEASE ECN XXXXXX	XX/XX/XX	R. WILLIAMS

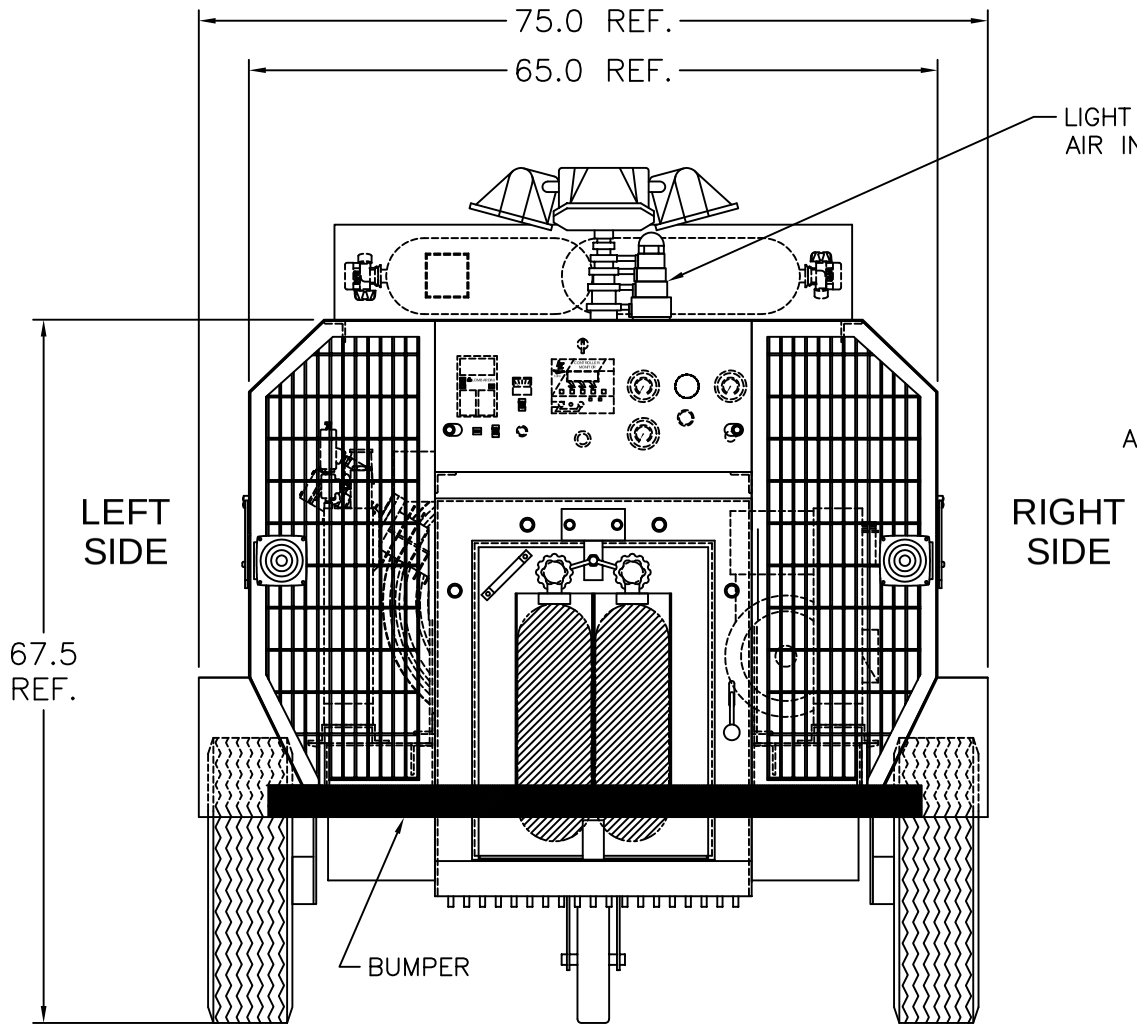

REAR VIEW

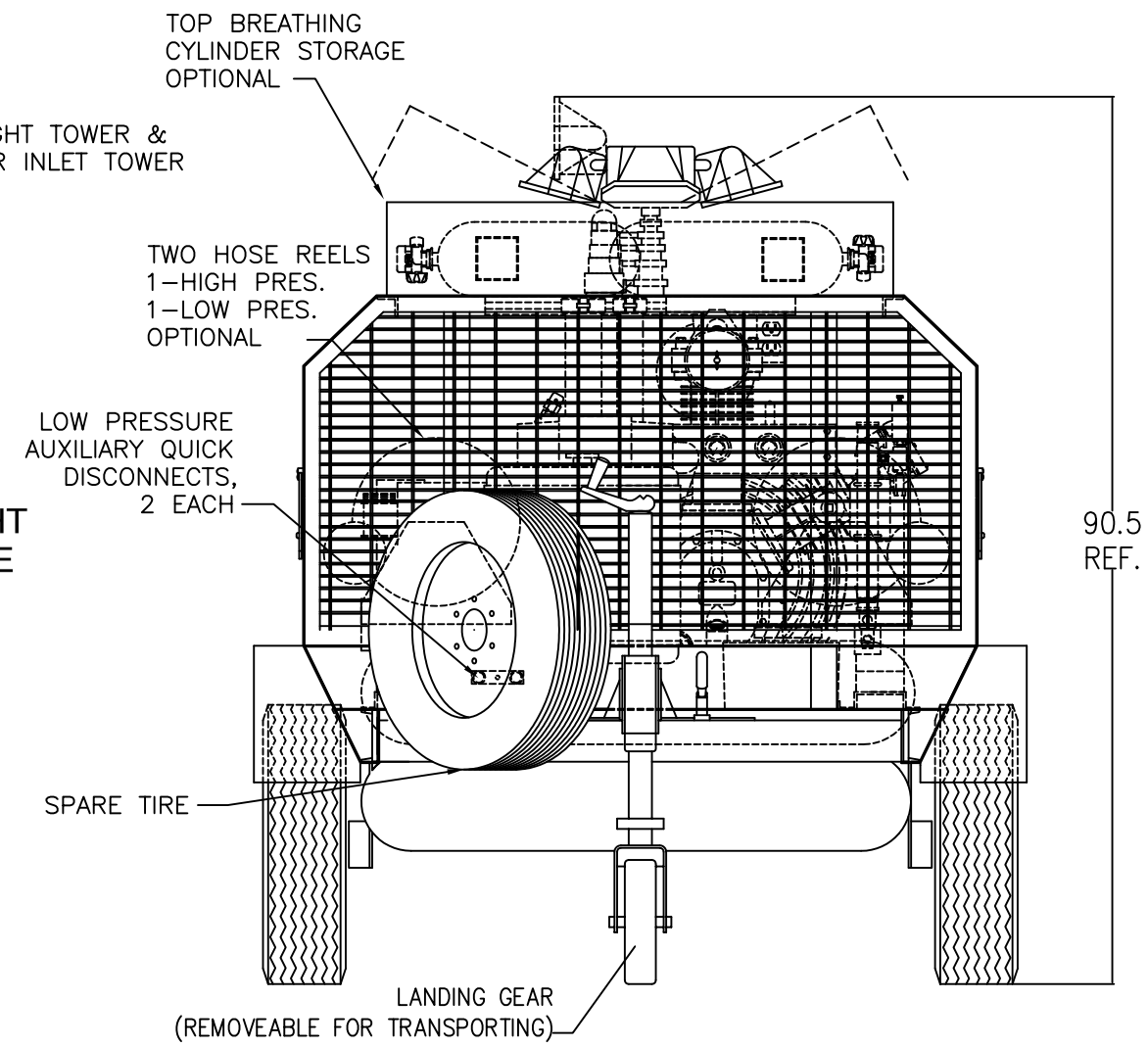

FRONT VIEW

NOTE:
THIS DRAWING IS REPRESENTATIVE OF ALL MODELS OF THE LIBERTY II TRAILER. THUS IT REPRESENTS PART NUMBERS:
AB10-05XX-XX , 5000 PSI COMPRESSOR MODELS AND
AB10-06XX-X, 6000PSI COMPRESSOR MODELS

COMMERCIAL RESTRICTIVE LEGEND — ALL ITEMS, ASSEMBLIES, SPECIFICATIONS AND DIMENSIONS INCLUDED ON THIS DRAWING ARE PROPRIETARY TO AND THE PROPERTY OF SCOTT TECHNOLOGIES INC AND MAY NOT BE USED TO MANUFACTURE OR DUPLICATE ANY ITEM SHOWN HEREIN, NOR BE COPIED, REPRODUCED, OR DISTRIBUTED IN WHOLE OR IN PART, WITHOUT AUTHORIZATION, OR DISCLOSED TO ANY THIRD PARTY WITHOUT OBTAINING THE EXPRESS WRITTEN AUTHORIZATION OF SCOTT TECHNOLOGIES, INC.

DRAWN: R. WILLIAMS	12-5-03	SCOTT® SCOTT HEALTH AND SAFETY, MONROE CORPORATE CENTER, 4320 GOLDMINE ROAD, MONROE, NORTH CAROLINA 28110
APPROVED: R. WILLIAMS	12-5-03	TITLE: LIBERTY II TANDEM TRAILER
ORIGINAL SIZE: X .XX ±.01 ±.005 ANGLE ±1/2° UNLESS OTHERWISE SPECIFIED: DIMENSIONS ARE IN INCHES. ALL DIMENSIONS AFTER PLATING. BREAK ALL SHARP EDGES ON EXTERNAL SURFACES		SIZE: E · CAGE CODE: 15927 · DRAWING NO.: AB10–05XX–XX · REV: – · SCALE: NONE · SHEET 1 OF 3